INDIANA SUPER STOCK COIL SPRING REAR SUSPENSION RULES

TRAILING ARMS

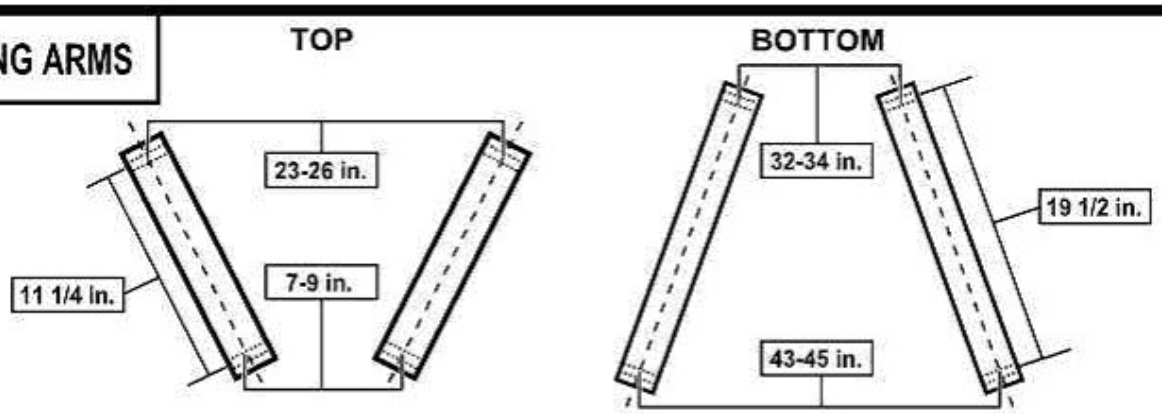

TRAILING ARM LENGTH WILL BE MEASURED FROM HOLE TO HOLE - ARMS MAY BE MADE OUT OF SQUARE TUBING
NO HEIM JOINTS - TRAILING ARMS MUST BE ONE PIECE AND MUST BE RIGID

TRAILING ARM TO REAR END MOUNTING

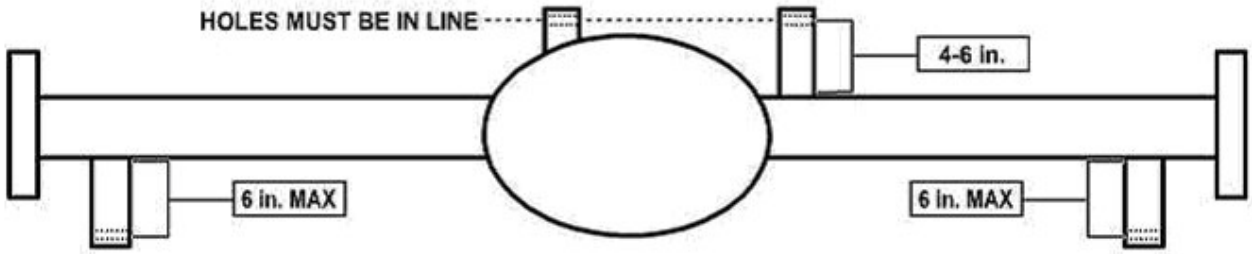

ALL TRAILING ARM BRACKETS MUST BE RIGID AND MOUNTED SOLID TO REAR END HOUSING AND MAY NOT FLOAT IN ANY WAY

COIL SPRING LOCATION

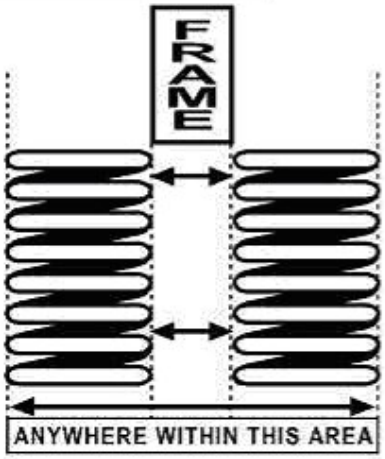

COIL SPRING MUST BE LOCATED EXACTLY ADJACENT TO OR UNDERNEATH FRAME RAIL. MAY NOT BE SPACED IN OR OUT FROM FRAME RAIL
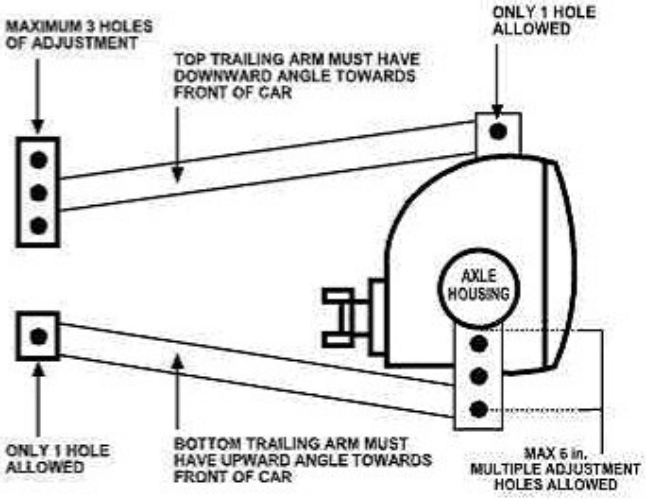
TRAILING ARM TO CHASSIS MOUNTING